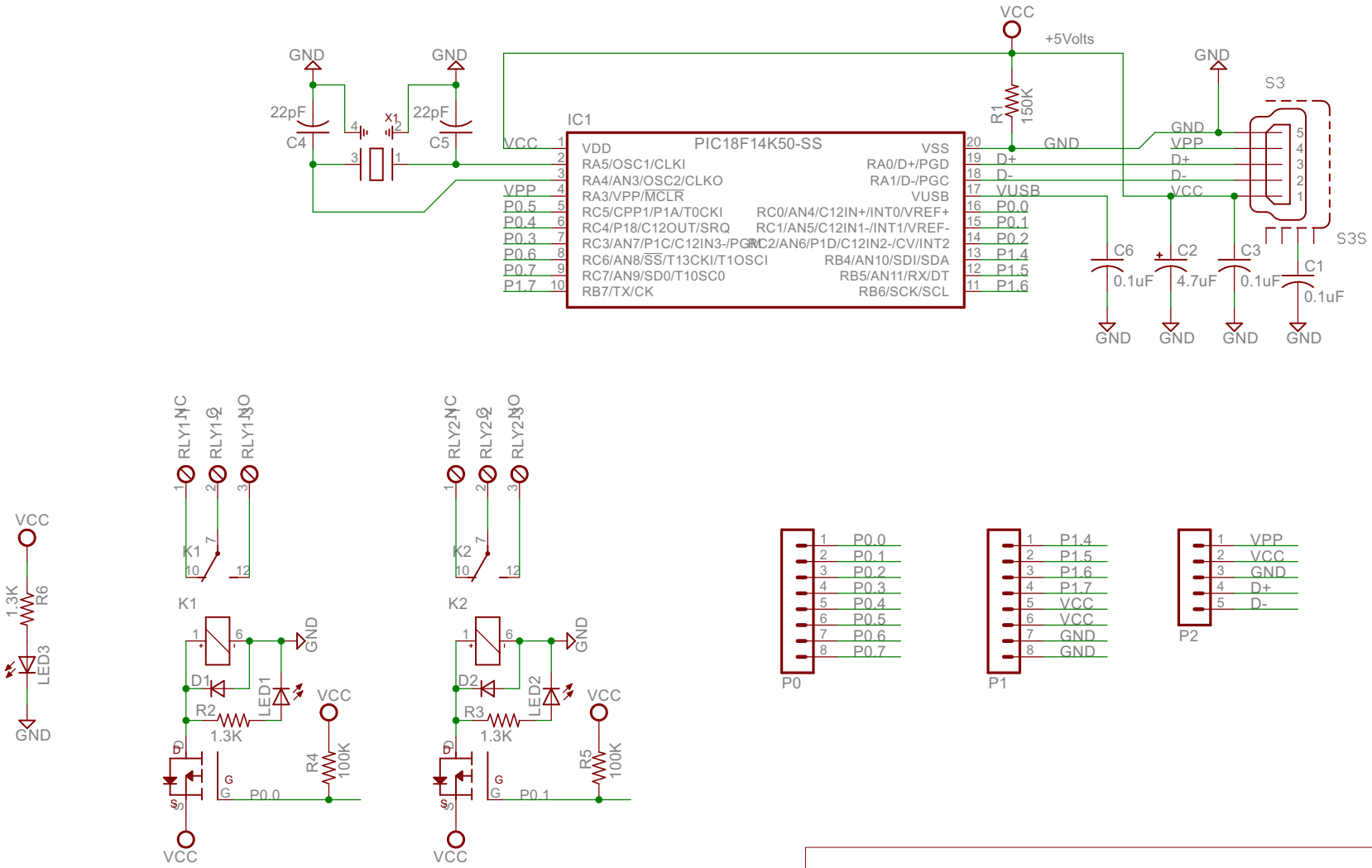

USB Dual Relay

TITLE: USB2RLY

Document Number: USB2RLY

REV: B

Date: 7/11/2014 8:47:27 PM

Sheet: 1/1

Rev B - 07/11/2014 - Change to PIC Micro

Rev A - 11/10/2010 - Added R4 & R5 Pull