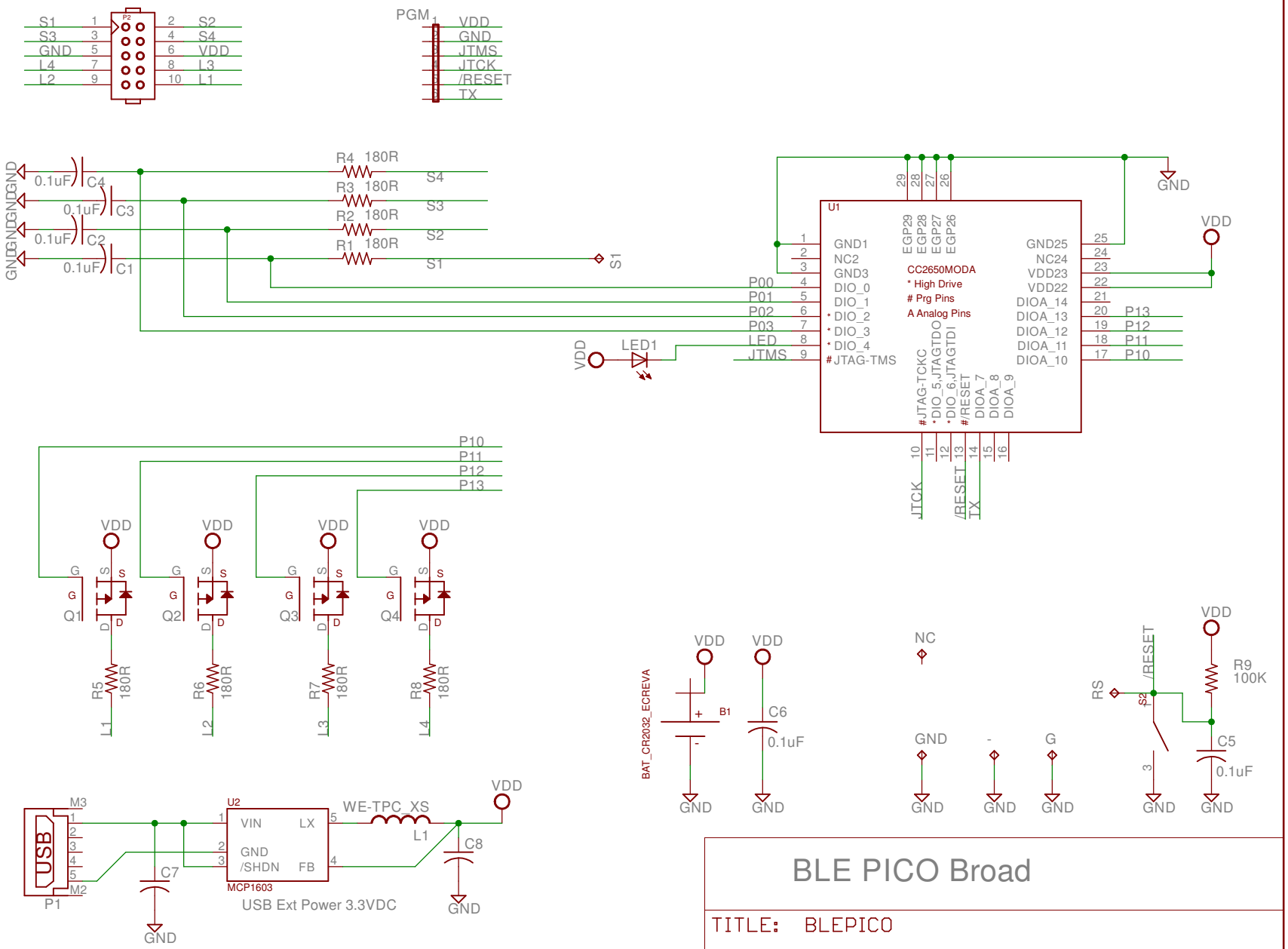

REV 0 - 5/21/2018 Beta Release
REV A - 1/15/2020 Added reset hardward, remapped P1.0-3, add pgm header, added TX
REV B - 1/22/2021 AddedTestLED, reset pad and tactile Switch, USB Power.

BLE PICO Broad

TITLE: BLEPICO

Document Number:

REV: B

Date: 1/22/2021 5:38:07 PM

Sheet: 1/1