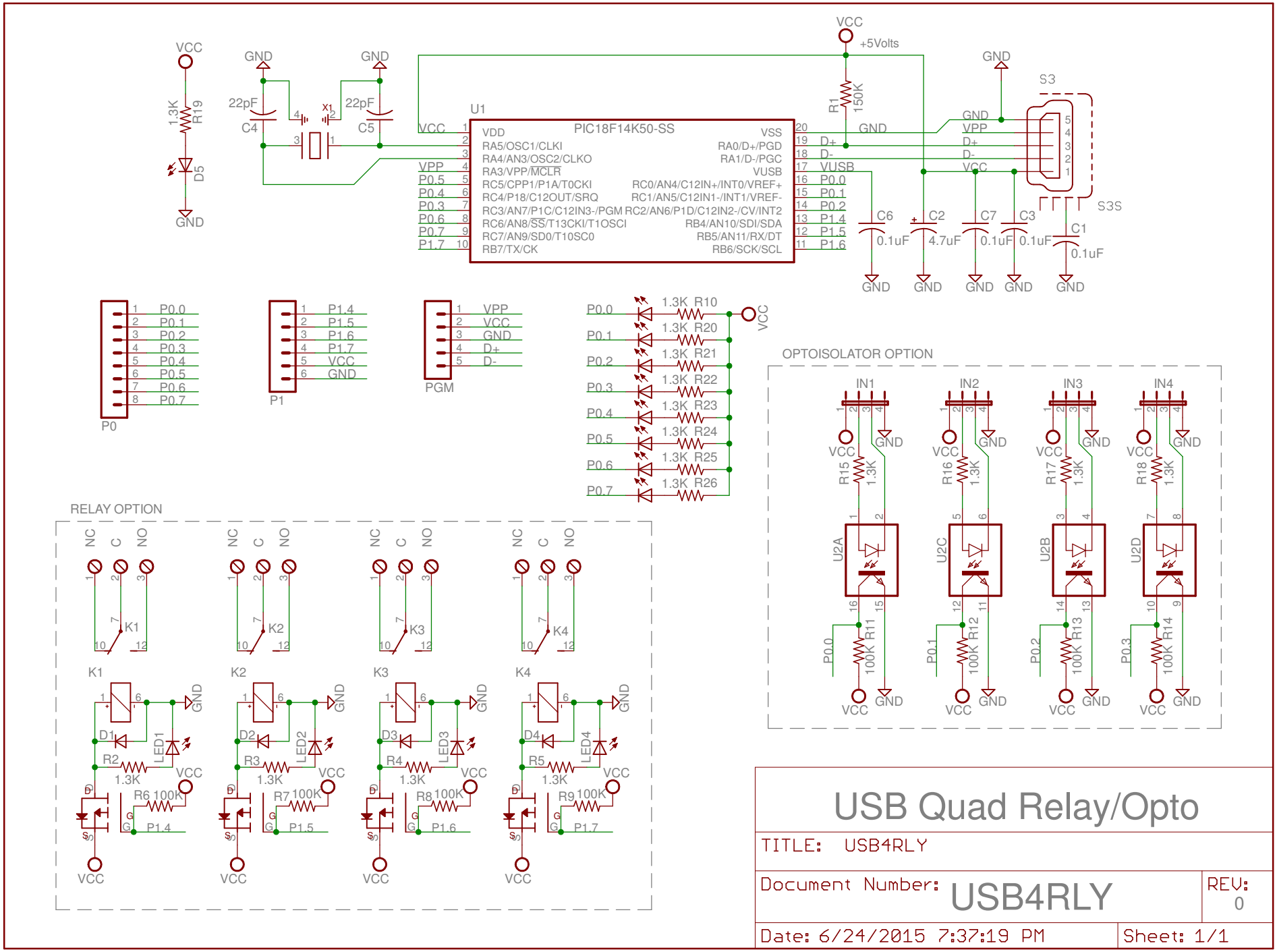

USB Quad Relay/Opto

TITLE: USB4RLY

Document Number: USB4RLY

REV: 0

Date: 6/24/2015 7:37:19 PM

Sheet: 1/1